PRODUCT NEWS

PN-E-004

TYPE
SKG 09 / MSG 09

GENERATION 2020s

DIJET

SKS-GII

For heat resistant alloy, titanium alloy and hardened stainless steel.

- Face mill type ø 40 ~ ø 80
- Modular type ø 25 ~ ø 42
- Endmill type ø 25 ~ ø 42

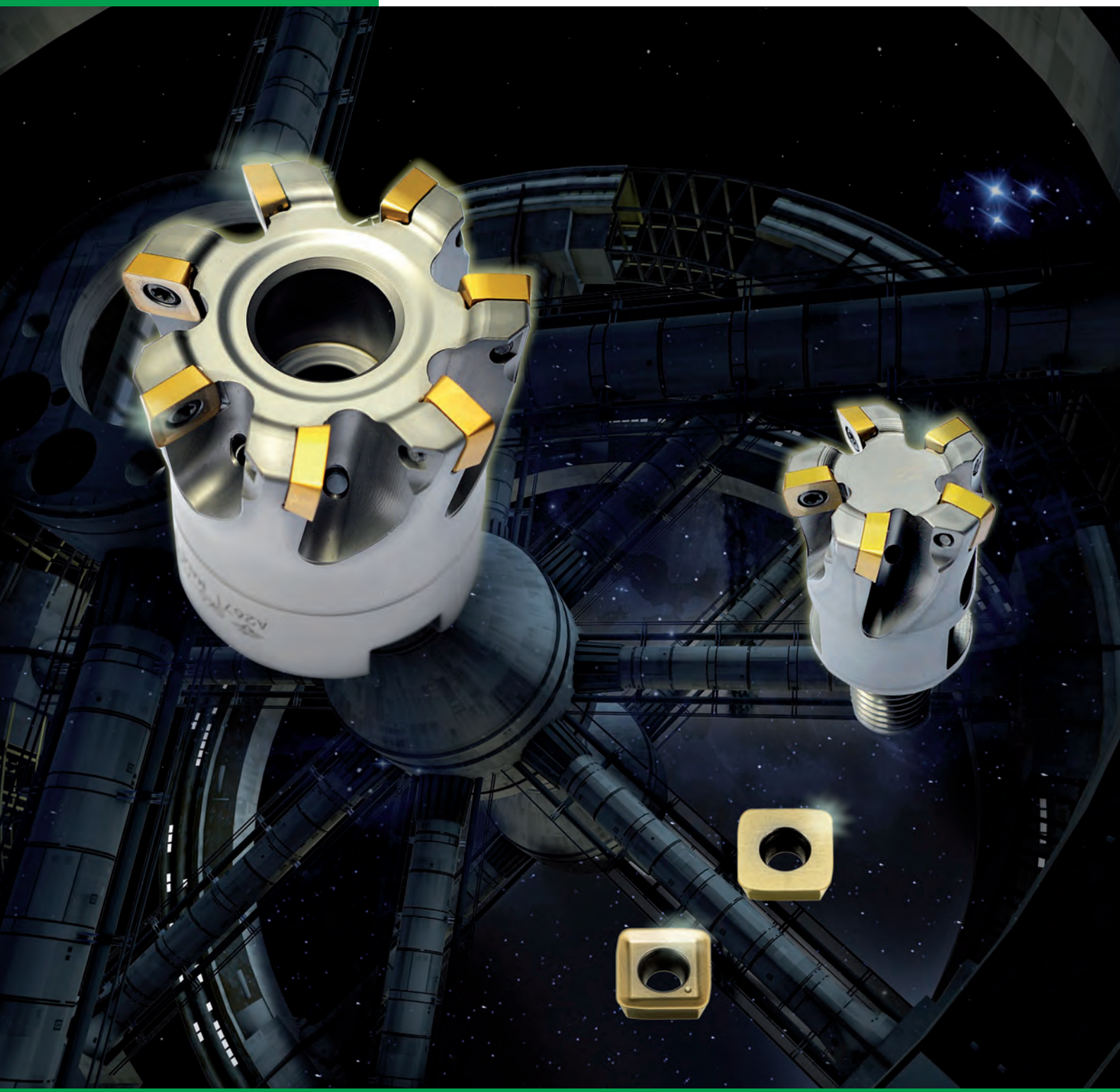

Mills for Aerospace & Transportation: **www.dijet.de**

MILLING POWER MADE IN JAPAN

Our high-performance products are designed and developed for individual demands of high quality production.Innovative manufacturing technology with highest precision provides minimum tolerances to realise meanderings in component processing merely up to 6 micrometres. Shorter cutting periods up to 50 % enables to reduce machining significant and contribute competitive advantage.

Development concept

1. Designed for Ni-base heat resistant alloy, titanium alloy and hardened stainless steel.
2. Achieved Max ap=0.9 mm even if difficult-to-machine materials.
3. Multi-edge design enables high efficiency machining.
4. Excellent cutting performance due to low cutting force and sharp cutting edge design.

CUTTING FORCE COMPARISON

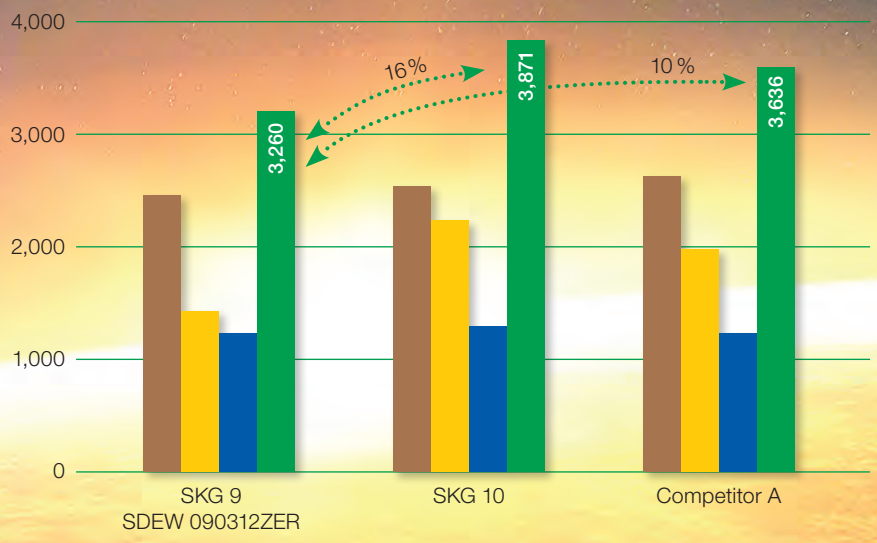

Cutting resistance reduction by high axial lake and the sharp edge

- Main
- Back
- Feed
- Resultant

Mat';l Titanium Alloy dia: φ50
Overhung length: 135mm
air
n = 380/min^{-1}
Vc = 60m/min
Vf = 230mm/min
fz = 0.6mm
Ap = 0.8mm
Ae = 20mm

INSERT LINE-UP

SDEW 090312 ZER (JC 7518)

SDEW 090312 ZER (JC 7550)

SDET 090312 ZDER-SM (JC 7550)

Wear resistance ⟷ Fracture resistance

Inserts	Titanium alloy	Inconel	SUS 630	SUS 316L
SDEW 090312 ZER (JC 7518)	❍	❍	❍	
SDEW 090312 ZER (JC 7550)	●			❍ ●
SDET 090312 ZDER-SM (JC 7550)		●	●	

❍ Stable machining
● Unstable machining

TOOL LIFE COMPARISON (TITANIUM)

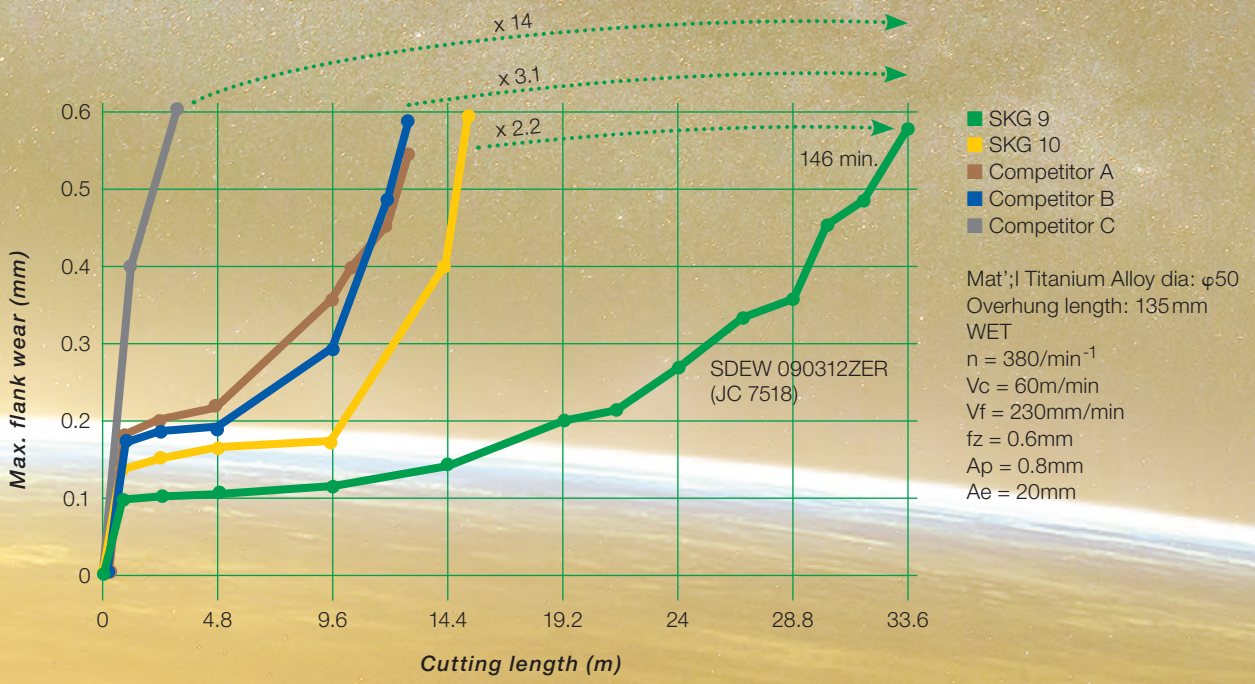

Mat';l Titanium Alloy dia: φ50
Overhung length: 135mm
WET
n = 380/min^{-1}
Vc = 60m/min
Vf = 230mm/min
fz = 0.6mm
Ap = 0.8mm
Ae = 20mm

FACEMILL TYPE

G-Body Through coolant hole

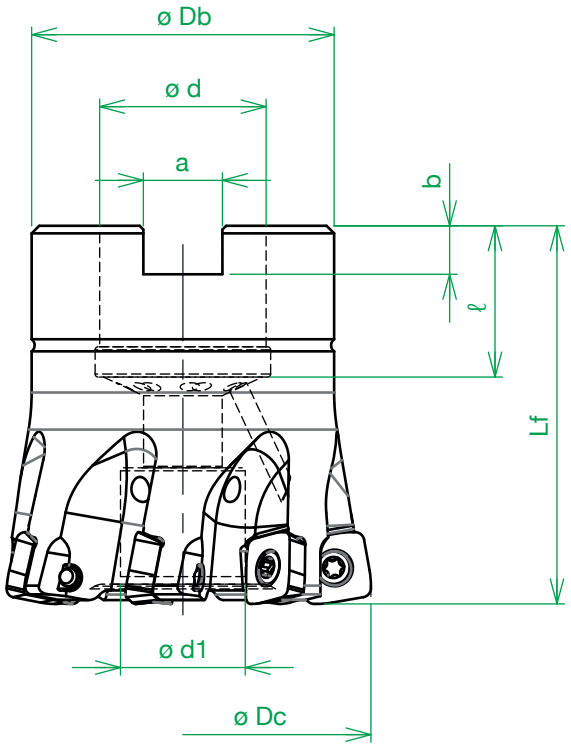

Catalogue No.	Stock	No. of inserts	Dimensions (mm)								Set bold	Weight
			ø Dc	Lf	ø Db	ø d	ø d1	a	b	ℓ		
SKG-5040R-09-16	●	5	40	40	37	16	13.5	8.4	5.6	18	M8	0.2
SKG-7050R-09-22	●	7	50	50	40	22	16,5	10,4	6,3	20	M10	0,3
SKG-7052R-09-22	●	7	52	50	40	22	16,5	10,4	6,3	20	M10	0,4
SKG-8063R-09-22	●	8	63	50	48	22	17	10,4	6,3	20	M10	0,6
SKG-8066R-09-27	●	8	66	50	50	27	20	12,4	7	22	M12	0,6
SKG-9080R-09-27	●	9	80	50	60	27	20	12,4	7	22	M12 x 1.75 x30 ★	1

Note:
1.) All cutters are supplied without inserts.
2.) All cutters are supplied without wrench & moly.
★ = These cutter bodies are equipped with the set bolt because of the specified bolt size.
Except for these cutter bodies, please use the set bolt equipped with arbor.

Parts	
Clamp screw	**Wrench** (not included)
DSW-307H	A-10

Clamp screw	Recommended torque
DSW-307H	2.1

● = Standard stock item ❑ = Stock in Japan ❍ = Soon to be deleted

MODULAR HEAD TYPE

G-Body Through coolant hole

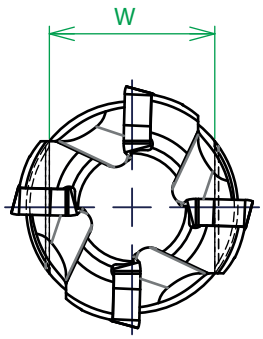

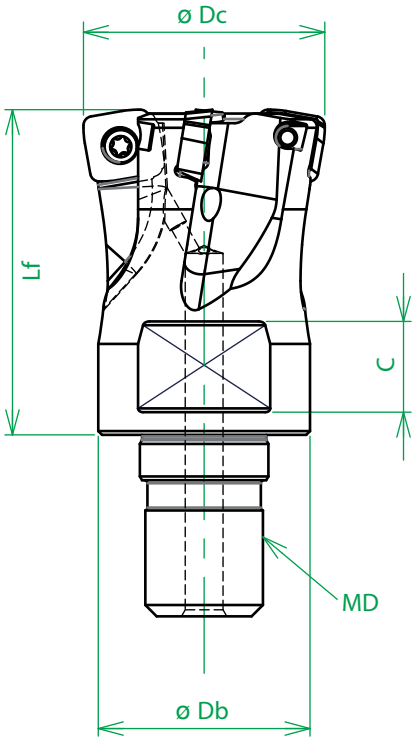

Catalogue No.	Stock	No. of inserts	Dimensions (mm)						Inserts	Parts	
			ø Dc	Lf	ø Db	MD	C	W		Clamp screw	Wrench
MSG-3025-09-M12	●	3	25	35	23	M12	11	19	SDE* 090312 ZER	DSW-307H	A-10
MSG-4032-09-M16	●	4	32	43	28	M16	12	22			
MSG-5035-09-M16	●	5	35	43	29	M16	12	22			
MSG-5040-09-M16	●	5	40	43	32	M16	14	26			
MSG-5042-09-M16	●	5	42	43	32	M16	14	26			

Note:
1.) All cutters are supplied without inserts.
2.) All cutters are supplied without wrench & moly.
3.) Please see page 15 for recommended tightening torgue.

Clamp screw	Recommended torque
DSW-307H	2.1

● = Standard stock item ❑ = Stock in Japan ❍ = Soon to be deleted

ENDMILL TYPE

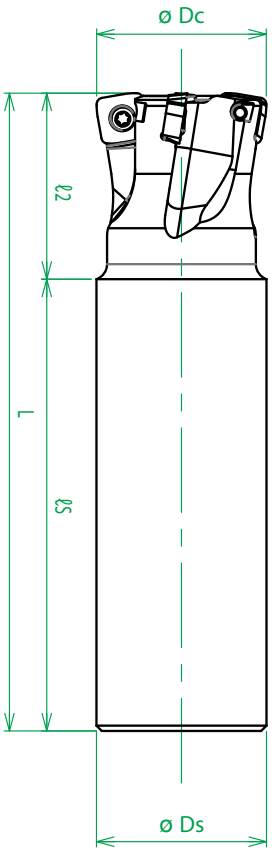

Catalogue No.	Stock	No. of inserts	Dimensions (mm)					Inserts	Parts	
			ø Dc	ℓ 2	ℓ s	L	ø Ds		Clamp screw	Wrench
SKGS-3025-09-30-S25+A	●	3	25	30	70	100	25	SDE* 090312 ZER	DSW-307H	A-10
SKGS-4032-09-35-S32+A	●	4	32	35	85	120	32			
SKGS-5035-09-35-S32+A	●	5	35	35	85	120	32			
SKGS-5040-09-35-S32+A	●	5	40	35	85	120	32			
SKGS-5042-09-35-S32+A	●	5	42	35	85	120	32			

Note:
All cutters are supplied without inserts.

Clamp screw	Recommended torque
DSW-307H	2.1

● = Standard stock item ❑ = Stock in Japan ❍ = Soon to be deleted

INSERTS

SDEW 090312 ZER

Fig. 1

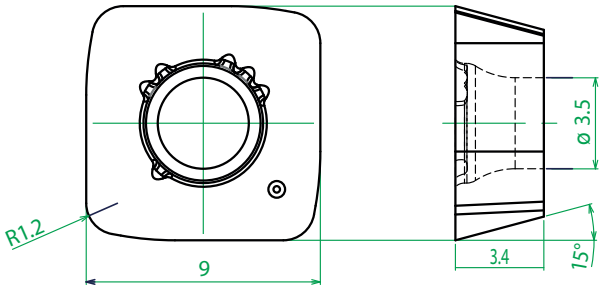

SDET 090312Z DER-SM

Fig. 2

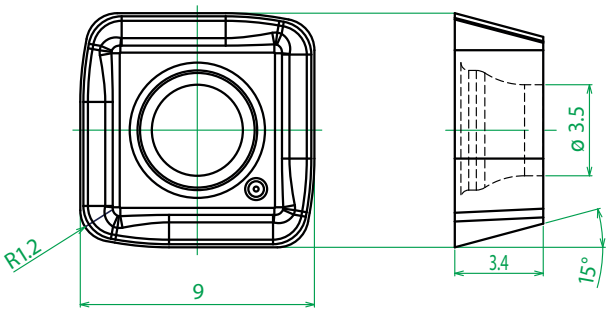

Catalogue No.	Tolerance	PVD Coated		Fig.
		JC 7550	JC 7518	
SDEW 090312 ZER	E	●	●	1
SDET 090312Z DER-SM	E	●		2

10 inserts per case

How to recognize the grade of inserts

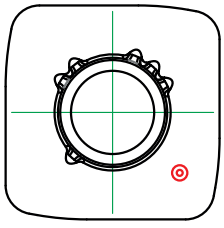

JC 7550

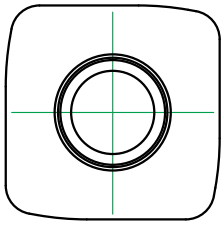

JC 7518

● = Standard stock item ❑ = Stock in Japan ❍ = Soon to be deleted

MSN CARBIDE SHANK ARBOR

For high productivity

Endmill shank type · Through coolant hole

Straight arbor type · Through coolant hole

Fig. 1

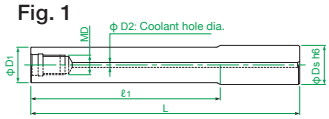

Fig. 2

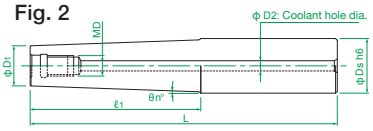

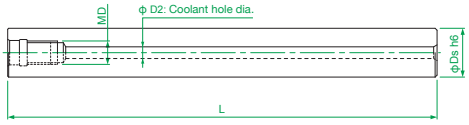

Catalogue No.	Stock	Dimensions (mm)							Weight	Fig.
		øDs	ℓ1	L	øD1	øn°	MD	øD2		
MSN-M12-25-S25C	●	25	25	90	24	–	M12	6	0.53	1
MSN-M12-55-S25C	●	25	55	120	24	–			0.72	1
MSN-M12-100T-S32C	❑	32	100	180	23.5	2°			1.61	2
MSN-M12-105-S25C	●	25	105	170	24	–			1.03	1
MSN-M12-135-S25C	●	25	135	215	24	–			1.30	1
MSN-M12-155-S25C	●	25	155	220	24	–			1.34	1
MSN-M12-200-S25C	●	25	200	265	24	–			1.58	1
MSN-M16-25-S32C	●	32	25	90	29	–	M16	8	0.85	1
MSN-M16-55-S32C	●	32	55	120	29	–			1.13	1
MSN-M16-77-S32C	●	32	77	157	29	–			1.47	1
MSN-M16-97-S32C	●	32	97	177	29	–			1.64	1
MSN-M16-105-S32C	●	32	105	170	29	–			1.59	1
MSN-M16-117T-S32C	❑	32	117	197	29	0°38′			1.88	2
MSN-M16-127-S32C	●	32	127	207	29	–			1.89	1
MSN-M16-127T-S32C	❑	32	127	207	29	0°30′			2.23	2
MSN-M16-155-S32C	●	32	155	220	29	–			2.04	1
MSN-M16-177-S32C	●	32	177	257	29	–			2.32	1
MSN-M16-177T-S32C	●	32	177	257	29	0°23′			2.78	2
MSN-M16-195-S32C	●	32	195	260	29	–			2.40	1
MSN-M16-197T-S32C	❑	32	197	277	29	0°23′			3.00	2
MSN-M16-225-S32C	●	32	225	290	29	–			2.57	1
MSN-M16-245-S32C	●	32	245	310	29	–			2.74	1
MSN-M16-295-S32C	●	32	295	360	29	–			3.17	1

Note:
Please see page 15 for recommended tightening torgue.

Catalogue No.	Stock	Dimensions (mm)				Weight
		øDs	L	MD	øD2	
MSN-M12-185S-S23C	●	23	185	M12	6	0.98
MSN-M12-265S-S23C	●		265			1.42
MSN-M12-185S-S24C	●	24	185	M12	6	1.07
MSN-M12-265S-S24C	●		265			1.54
MSN-M12-145S-S25C	●	25	145	M12	6	0.91
MSN-M12-215S-S25C	●		215			1.36
MSN-M12-285S-S25C	●		285			1.80
MSN-M16-160S-S28C	●	28	160	M16	8	1.22
MSN-M16-230S-S28C	●		230			1.77
MSN-M16-310S-S28C	●		310			2.41
MSN-M16-157S-S32C	●	32	157	M16	8	1.61
MSN-M16-217S-S32C	●		217			2.22
MSN-M16-287S-S32C	●		287			2.94
MSN-M16-357S-S32C	●		357			3.66

Note:
Please see page 15 for recommended tightening torgue.

● = Standard stock item ❑ = Stock in Japan ❍ = Soon to be deleted

CORNER RADIUS FOR PROGRAMMING

SDET 090312ZDER-SM
SDEW 090312ZER

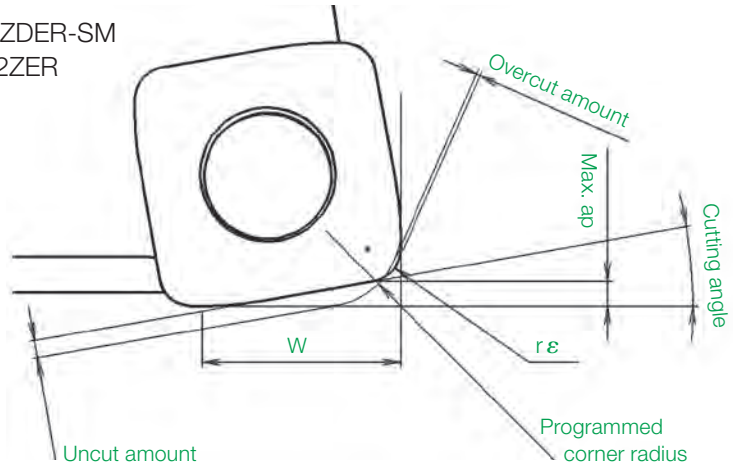

	Programmed corner R	Uncut amount	Overcut amount	Max. ap	W	Cutting angle	Actual corner rε
□9	1.5	0.81	0	0.9	7.1	10	1.2
	2 recommended	0.73	0				
	2.5	0.65	0.08				

Attention for profile milling

Ramping

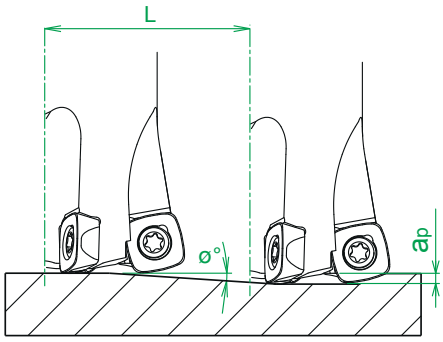

Helical interpolation

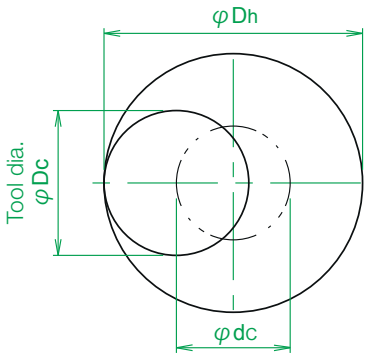

Calculation of tool pass dia.

$$\varphi dc = \varphi Dh - \varphi Dc$$

Tool pass dia. Bore dia. Tool dia.

- Depth of cut per one circuit should not exceed max. depth of cut ap.
- Down cutting is recommended, so tool pass rotation should be counterclockwise.
- In case of ramping and helical interpolation, apply 70% or less feed speed from standard cutting condition table.

Catalogue No.	Dia.	Effective cutting Dia.	Max. Depth of cut	Ramping		Helical interpolation	
				Max. ramping angle	Total cutting length at Max.Ap	Min bore dia.	Max bore dia
MSG-3025-09-M12/SKG-3025-30-09-S25+A	25	10,7	0,9	1	51,6	37	48
MSG-4032-09-M16/SKG-4032-35-09-S32+A	32	17,6	0,9	1	51,6	51	62
MSG-5035-09-M16/SKG-5035-35-09-S32+A	35	20,6	0,9	1	51,6	57	68
MSG-5040-09-M16/SKG-5040-35-09-S32+A	40	25,7	0,9	1	51,6	67	78
MSG-5042-09-M16/SKG-5042-35-09-S32+A	42	27,7	0,9	1	51,6	71	82
SKG-5040R-09-16	40	25,7	0,9	1	51,6	67	78
SKG-7050R-09-22	50	35,6	0,9	1	51,6	87	98
SKG-7052R-09-22	52	37,6	0,9	1	51,6	91	102
SKG-8063R-09-22	63	48,7	0,9	0,75	68,8	113	124
SKG-8066R-09-27	66	51,7	0,9	0,75	68,8	119	130
SKG-9080R-09-27	80	65,7	0,9	0,5	103,1	147	158

RECOMMENDED CUTTING CONDITIONS

Facemill SKG type

Work Mat'l	Insert	Grade	Dimensions (mm)									
			40 / 5N					50 / 7N				
			ℓ (mm)	ap (mm)	ae (mm)	n (min-1)	vf (mm/min.)	ℓ (mm)	ap (mm)	ae (mm)	n (min-1)	vf (mm/min.)
Stainless steel Austenitic (AISI 304, 316, 317)	SDEW 090312ZER (SDET 090312 ZDER-SM)	JC7550	~150	0,6	~23	1190	5950	~150	0,8	~32	950	6650
			200	0,4	~23	1190	5950	200	0,6	~32	950	6650
			250	0,3	~23	990	4950	250	0,4	~32	800	5600
			300	–	–	–	–	300	0,3	~32	800	5600
			350	–	–	–	–	350	0,3	~32	800	4760
Stainless steel Ferritics/Martensitic (AISI 403, 420J2, 430)	SDEW 090312ZER (SDET090312 ZDER-SM)	JC7550	~150	0,6	~23	1510	7550	~150	0,8	~32	1210	8470
			200	0,4	~23	1510	7550	200	0,6	~32	1210	8470
			250	0,3	~23	1230	6150	250	0,4	~32	990	6930
			300	–	–	–	–	300	0,3	~32	990	6930
			350	–	–	–	–	350	0,3	~32	990	5890
Super duplex stainless steel (S32750)	SDEW 090312ZER	JC7518 (JC7550)	~150	0,6	~23	800	1200	~150	0,8	~32	640	1340
			200	0,4	~23	800	1200	200	0,6	~32	640	1340
			250	0,3	~23	680	1020	250	0,4	~32	540	1130
			300	–	–	–	–	300	0,3	~32	540	1130
			350	–	–	–	–	350	0,3	~32	540	950
Titanium alloy 35～43HRC	SDEW 090312ZER	JC7518 (JC7550)	~150	0,6	~23	480	1440	~150	0,8	~32	380	1600
			200	0,4	~23	480	1440	200	0,6	~32	380	1600
			250	0,3	~23	400	1200	250	0,4	~32	320	1340
			300	–	–	–	–	300	0,3	~32	320	1340
			350	–	–	–	–	350	0,3	~32	320	1120
Inconel 35～43HRC	SDEW 090312ZER	JC7518 (JC7550)	~150	0,5	~23	240	720	~150	0,5	~32	190	800
			200	0,35	~23	240	720	200	0,4	~32	190	800
			250	0,25	~23	200	600	250	0,25	~32	160	670
			300	–	–	–	–	300	0,2	~32	160	670
			350	–	–	–	–	350	0,2	~32	160	560

Note (also for next page):

1. The figure to be adjusted according to the machine rigidity or work rigidity.
2. In case of chatter occurring, recommend to reduce the depth of cut ap or Spindle speed and keep feed per tooth.
3. If machine does not have enough power, recommend to reduce the depth of cut ap or Spindle speed and Feed speed.
4. Use air blow.

ℓ: Overhung length
ap: Axial depth of cut
ae: Radial depth of cut
n: Spindle speed
vf: Feed speed

Work Mat'l	Insert	Grade	Dimensions (mm)									
			52 / 7N					63 / 8N				
			ℓ (mm)	ap (mm)	ae (mm)	n (min^{-1})	vf (mm/min.)	ℓ (mm)	ap (mm)	ae (mm)	n (min^{-1})	vf (mm/min.)
Stainless steel Austenitic (AISI 304, 316, 317)	SDEW 090312ZER (SDET 090312 ZDER-SM)	JC7550	~150	0,8	~33	920	6440	~150	0,8	~43	760	6080
			200	0,6	~33	920	6440	200	0,6	~43	760	6080
			250	0,4	~33	770	5390	250	0,4	~43	630	5040
			300	0,3	~33	770	5390	300	0,3	~43	630	5040
			350	0,3	~33	770	4580	350	0,3	~43	630	4280
Stainless steel Ferritics/Martensitic (AISI 403, 420J2, 430)	SDEW 090312ZER (SDET090312 ZDER-SM)	JC7550	~150	0,8	~33	1160	8120	~150	0,8	~43	960	7680
			200	0,6	~33	1160	8120	200	0,6	~43	960	7680
			250	0,4	~33	950	6650	250	0,4	~43	780	6240
			300	0,3	~33	950	6650	300	0,3	~43	780	6240
			350	0,3	~33	950	5650	350	0,3	~43	780	5300
Super duplex stainless steel (S32750)	SDEW 090312ZER	JC7518 (JC7550)	~150	0,8	~33	610	1280	~150	0,8	~43	510	1220
			200	0,6	~33	610	1280	200	0,6	~43	510	1220
			250	0,4	~33	520	1090	250	0,4	~43	430	1030
			300	0,3	~33	520	1090	300	0,3	~43	430	1030
			350	0,3	~33	520	910	350	0,3	~43	430	860
Titanium alloy 35～43HRC	SDEW 090312ZER	JC7518 (JC7550)	~150	0,8	~33	370	1550	~150	0,8	~43	300	1440
			200	0,6	~33	370	1550	200	0,6	~43	300	1440
			250	0,4	~33	310	1300	250	0,4	~43	250	1200
			300	0,3	~33	310	1300	300	0,3	~43	250	1200
			350	0,3	~33	310	1090	350	0,3	~43	250	1000
Inconel 35～43HRC	SDEW 090312ZER	JC7518 (JC7550)	~150	0,5	~33	180	760	~150	0,5	~43	150	720
			200	0,4	~33	180	760	200	0,4	~43	150	720
			250	0,25	~33	150	630	250	0,25	~43	130	620
			300	0,2	~33	150	630	300	0,2	~43	130	620
			350	0,2	~33	150	530	350	0,2	~43	130	520

			66 / 8N					80 / 9N				
Stainless steel Austenitic (AISI 304, 316, 317)	SDEW 090312ZER (SDET 090312 ZDER-SM)	JC7550	~150	0,8	~46	720	5760	~150	0,8	~59	600	5400
			200	0,6	~46	720	5760	200	0,6	~59	600	5400
			250	0,4	~46	600	4800	250	0,4	~59	500	4500
			300	0,3	~46	600	4800	300	0,3	~59	500	4500
			350	0,3	~46	600	4080	350	0,3	~59	500	3830
Stainless steel Ferritics/Martensitic (AISI 403, 420J2, 430)	SDEW 090312ZER (SDET090312 ZDER-SM)	JC7550	~150	0,8	~46	920	7360	~150	0,8	~59	760	6840
			200	0,6	~46	920	7360	200	0,6	~59	760	6840
			250	0,4	~46	750	6000	250	0,4	~59	620	5580
			300	0,3	~46	750	6000	300	0,3	~59	620	5580
			350	0,3	~46	750	5100	350	0,3	~59	620	4740
Super duplex stainless steel (S32750)	SDEW 090312ZER	JC7518 (JC7550)	~150	0,8	~46	480	1150	~150	0,8	~59	400	1080
			200	0,6	~46	480	1150	200	0,6	~59	400	1080
			250	0,4	~46	410	980	250	0,4	~59	340	920
			300	0,3	~46	410	980	300	0,3	~59	340	920
			350	0,3	~46	410	820	350	0,3	~59	340	770
Titanium alloy 35～43HRC	SDEW 090312ZER	JC7518 (JC7550)	~150	0,8	~46	290	1390	~150	0,8	~59	240	1300
			200	0,6	~46	290	1390	200	0,6	~59	240	1300
			250	0,4	~46	240	1150	250	0,4	~59	200	1080
			300	0,3	~46	240	1150	300	0,3	~59	200	1080
			350	0,3	~46	240	960	350	0,3	~59	200	900
Inconel 35～43HRC	SDEW 090312ZER	JC7518 (JC7550)	~150	0,5	~46	140	670	~150	0,5	~59	120	650
			200	0,4	~46	140	670	200	0,4	~59	120	650
			250	0,25	~46	120	580	250	0,25	~59	100	540
			300	0,2	~46	120	580	300	0,2	~59	100	540
			350	0,2	~46	120	480	350	0,2	~59	100	450

RECOMMENDED CUTTING CONDITIONS

Modular Head type · MSG type

Work Mat'l	Insert	Grade	Dimensions (mm)									
			25 / 3N					28 / 4N				
			ℓ (mm)	ap (mm)	ae (mm)	n (min^{-1})	vf (mm/min.)	ℓ (mm)	ap (mm)	ae (mm)	n (min^{-1})	vf (mm/min.)
Stainless steel Austenitic (AISI 304, 316, 317)	SDEW 090312 ZER (SDET 090312 ZDER-SM)	JC7550	~75	0,8	~9	1910	5730	~75	0,8	~12	1710	6840
			125	0,6	~9	1910	5730	125	0,6	~12	1710	6840
			175	0,6	~9	1720	4390	175	0,6	~12	1530	5200
Stainless steel Ferritics/Martensitic (AISI 403, 420J2, 430)	SDEW 090312 ZER (SDET 090312 ZDER-SM)	JC7550	~75	0,8	~9	2420	7260	~75	0,8	~12	2160	8640
			125	0,6	~9	2420	7260	125	0,6	~12	2160	8640
			175	0,6	~9	2160	5510	175	0,6	~12	1930	6560
Super duplex stainless steel (S32750)	SDEW 090312 ZER	JC7518 (JC7550)	~75	0,8	~9	1270	1140	~75	0,8	~12	1140	1370
			125	0,6	~9	1270	1140	125	0,6	~12	1140	1370
			175	0,6	~9	1150	860	175	0,6	~12	1020	1020
Titanium alloy 35~43HRC	SDEW 090312 ZER	JC7518 (JC7550)	~75	0,8	~9	760	1370	~75	0,8	~12	680	1630
			125	0,6	~9	760	1370	125	0,6	~12	680	1630
			175	0,6	~9	700	1050	175	0,6	~12	630	1260
Inconel 35~43HRC	SDEW 090312 ZER	JC7518 (JC7550)	~75	0,5	~9	380	680	~75	0,5	~12	340	820
			125	0,4	~9	380	680	125	0,4	~12	340	820
			175	0,4	~9	320	480	175	0,4	~12	280	560

			32 / 4N					35 / 5N				
Stainless steel Austenitic (AISI 304, 316, 317)	SDEW 090312 ZER (SDET 090312 ZDER-SM)	JC7550	~90	0,8	~15	1490	5960	~90	0,8	~18	1360	6800
			150	0,6	~15	1490	5960	150	0,6	~18	1360	6800
			210	0,6	~15	1240	3970	210	0,6	~18	1140	4560
Stainless steel Ferritics/Martensitic (AISI 403, 420J2, 430)	SDEW 090312 ZER (SDET 090312 ZDER-SM)	JC7550	~90	0,8	~15	1890	7560	~90	0,8	~18	1730	8650
			150	0,6	~15	1890	7560	150	0,6	~18	1730	8650
			210	0,6	~15	1540	4930	210	0,6	~18	1410	5640
Super duplex stainless steel (S32750)	SDEW 090312 ZER	JC7518 (JC7550)	~90	0,8	~15	990	1190	~90	0,8	~18	910	1370
			150	0,6	~15	990	1190	150	0,6	~18	910	1370
			210	0,6	~15	850	850	210	0,6	~18	770	960
Titanium alloy 35~43HRC	SDEW 090312 ZER	JC7518 (JC7550)	~90	0,8	~15	600	1440	~90	0,8	~18	550	1650
			150	0,6	~15	600	1440	150	0,6	~18	550	1650
			210	0,6	~15	500	1000	210	0,6	~18	450	1130
Inconel 35~43HRC	SDEW 090312 ZER	JC7518 (JC7550)	~90	0,5	~15	300	720	~90	0,5	~18	270	810
			150	0,4	~15	300	720	150	0,4	~18	270	810
			210	0,4	~15	250	500	210	0,4	~18	230	580

Work Mat'l	Insert	Grade	Dimensions (mm)									
			40 / 5N					42 / 5N				
			ℓ (mm)	ap (mm)	ae (mm)	n (min^{-1})	vf (mm/min.)	ℓ (mm)	ap (mm)	ae (mm)	n (min^{-1})	vf (mm/min.)
Stainless steel Austenitic (AISI 304, 316, 317)	SDEW 090312 ZER (SDET 090312 ZDER-SM)	JC7550	~120	0,8	~23	1190	5950	~120	0,8	~24	1140	5700
			200	0,6	~23	1190	5950	200	0,6	~24	1140	5700
			280	0,6	~23	990	4210	280	0,6	~24	950	4040
Stainless steel Ferritics/Martensitic (AISI 403, 420J2, 430)	SDEW 090312 ZER (SDET 090312 ZDER-SM)	JC7550	~120	0,8	~23	1510	7550	~120	0,8	~24	1440	7200
			200	0,6	~23	1510	7550	200	0,6	~24	1440	7200
			280	0,6	~23	1230	5230	280	0,6	~24	1170	4970
Super duplex stainless steel (S32750)	SDEW 090312 ZER	JC7518 (JC7550)	~120	0,8	~23	800	1200	~120	0,8	~24	760	1140
			200	0,6	~23	800	1200	200	0,6	~24	760	1140
			280	0,6	~23	680	850	280	0,6	~24	640	800
Titanium alloy 35～43HRC	SDEW 090312 ZER	JC7518 (JC7550)	~120	0,8	~23	480	1440	~120	0,8	~24	450	1350
			200	0,6	~23	480	1440	200	0,6	~24	450	1350
			280	0,6	~23	400	1000	280	0,6	~24	380	950
Inconel 35～43HRC	SDEW 090312 ZER	JC7518 (JC7550)	~120	0,5	~23	240	720	~120	0,5	~24	230	690
			200	0,4	~23	240	720	200	0,4	~24	230	690
			280	0,4	~23	200	500	280	0,4	~24	190	480

Endmill SKG type

Work Mat'l	Insert	Grade	Dimensions (mm)									
			25 / 3N					32 / 4N				
			ℓ (mm)	ap (mm)	ae (mm)	n (min^{-1})	vf (mm/min.)	ℓ (mm)	ap (mm)	ae (mm)	n (min^{-1})	vf (mm/min.)
Stainless steel Austenitic (AISI 304, 316, 317)	SDEW 090312 ZER (SDET 090312 ZDER-SM)	JC7550	40	0,8	~9	1910	6880	60	0,8	~15	1490	7150
Stainless steel Ferritics/Martensitic (AISI 403, 420J2, 430)	SDEW 090312 ZER (SDET 090312 ZDER-SM)	JC7550	40	0,8	~9	2420	8710	60	0,8	~15	1890	9070
Super duplex stainless steel (S32750)	SDEW 090312 ZER	JC7518 (JC7550)	40	0,8	~9	1270	1370	60	0,8	~15	990	1430
Titanium alloy 35～43HRC	SDEW 090312 ZER	JC7518 (JC7550)	40	0,8	~9	760	1640	60	0,8	~15	600	1730
Inconel 35～43HRC	SDEW 090312 ZER	JC7518 (JC7550)	40	0,5	~9	380	820	60	0,5	~15	300	860

Note (also for previous page):
1. The figure to be adjusted according to the machine rigidity or work rigidity.
2. In case of chatter occurring, recommend to reduce the depth of cut ap or Spindle speed and keep feed per tooth.
3. If machine does not have enough power, recommend to reduce the depth of cut ap or Spindle speed and Feed speed.
4. Use air blow.

ℓ: Overhung length
ap: Axial depth of cut
ae: Radial depth of cut
n: Spindle speed
vf: Feed speed

RECOMMENDED CUTTING CONDITIONS

Endmill SKG type

Work Mat'l	Insert	Grade	Dimensions (mm)									
			35 / 5N					40 / 5N				
			ℓ (mm)	ap (mm)	ae (mm)	n (min^{-1})	vf (mm/min.)	ℓ (mm)	ap (mm)	ae (mm)	n (min^{-1})	vf (mm/min.)
Stainless steel Austenitic (AISI 304, 316, 317)	SDEW 090312 ZER (SDET 090312 ZDER-SM)	JC7550	60	0,8	~18	1360	8160	60	0,8	~23	1190	7140
Stainless steel Ferritics/Martensitic (AISI 403, 420J2, 430)	SDEW 090312 ZER (SDET 090312 ZDER-SM)	JC7550	60	0,8	~18	1730	10380	60	0,8	~23	1510	9060
Super duplex stainless steel (S32750)	SDEW 090312 ZER	JC7518 (JC7550)	60	0,8	~18	910	1640	60	0,8	~23	800	1440
Titanium alloy 35~43HRC	SDEW 090312 ZER	JC7518 (JC7550)	60	0,8	~18	550	1980	60	0,8	~23	480	1730
Inconel 35~43HRC	SDEW 090312 ZER	JC7518 (JC7550)	60	0,5	~18	270	970	60	0,5	~23	240	860

			42 / 5N				
Stainless steel Austenitic (AISI 304, 316, 317)	SDEW 090312 ZER (SDET 090312 ZDER-SM)	JC7550	60	0,8	~24	1140	6840
Stainless steel Ferritics/Martensitic (AISI 403, 420J2, 430)	SDEW 090312 ZER (SDET 090312 ZDER-SM)	JC7550	60	0,8	~24	1440	8640
Super duplex stainless steel (S32750)	SDEW 090312 ZER	JC7518 (JC7550)	60	0,8	~24	760	1370
Titanium alloy 35~43HRC	SDEW 090312 ZER	JC7518 (JC7550)	60	0,8	~24	450	1620
Inconel 35~43HRC	SDEW 090312 ZER	JC7518 (JC7550)	60	0,5	~24	230	830

Note:
1. The figure to be adjusted according to the machine rigidity or work rigidity.
2. In case of chatter occurring, recommend to reduce the depth of cut ap or Spindle speed and keep feed per tooth.
3. If machine does not have enough power, recommend to reduce the depth of cut ap or Spindle speed and Feed speed.
4. Use air blow.

ℓ: Overhung length
ap: Axial depth of cut
ae: Radial depth of cut
n: Spindle speed
vf: Feed speed

RIGHT USAGE FOR PERFECT RESULTS

Attention to mounting head and MSN/ MGN shank holder.

■ Cleaning
Remove dirt and chips with air from the connecting thread and face of modular head and MSN/MGN shank holder.

■ Initial Tightening
Tighten by hand until the head and the shank holder faces touch.

■ Final Tightening
Tighten slowly with torque control spanner wrench or DIJET DS type spanner wrench and confirm that there is no gap.
Attention: Final tightening without initial tightening cause connecting thread damage.

Thread	Tightening torque	Spanner size
M6	8N·m	8 ✧
M8	16N·m	10, 12 ✧
M10	16N·m	14, 15
M12	20N·m	17, 19
M16	25N·m	22, 26

Modular heads are supplied without spanner wrench.

In case of choosing torque control spanner wrench, confirm that the wrench size is match to the dimensions W & C of each modular head. (There are some cases that modifying the thickness of spanner wrench is necessary)

✧ = DIJET have a stock of DS-8 and 12 type spanner wrenches.

Note:
1. Only use the torque control spanner wrench or DIJET DS type spanner wrench.
2. Please gently apply pressure on wrench.
3. Please confirm that there is no gap between MSN/MGN shank holder and modular head

SELECTION OF MSN CARBIDE SHANK HOLDER

Ø Dc – Ø D1 ≥ 1mm

In case of using modular head over Ø 16mm, **please select MSN carbide shank that diameter (Ø D1) is 1 mm or more smaller than modular head (Ø Dc)**.
A wrong selection causes damage to the carbide shank.

Coolant or air blow is recommended to remove the chips.

Caution for the mounting to shrink fit holder.
When you use a carbide shank and a modular head on the shrink fit holder, please shrink fit the only carbide shank without mounting a modular head together. Please mount a modular head after shrinking fit operation.

In case of shrink fit MSN shank + modular head together, it will be difficult to loose due to heat desipation.

JQA-2089 JQA-EM1580

HIGHEST PERFORMANCE
FOR BRILLIANT PRECISION

HEADQUARTER

DIJET Industrial Co. Ltd.
2-1-18, Kami-Higashi,
Hirano-ku, Osaka 547-0002, Japan
PHONE +81-6-6791-6781
FAX +81-6-6793-1221
www.dijet.co.jp

MAIN OFFICE EUROPE

DIJET GmbH
Immermannstraße 9
40210 Düsseldorf, Germany
PHONE +49-211-50088820
FAX +49-211-50088823
www.dijet.de